FAST GROUND SUPPORT EQUIPMENT

# Enclosed Carts

## *Protect 8,000 pounds from the elements*

***Move more baggage faster with a high-capacity, reinforced steel cart designed for years of rugged use.***

**Vinyl curtains** with webbed reinforcement to protect baggage from the elements

**Corner bumpers** to protect from damage on the ramp

A **fully integrated towbar** and **hitch** allow for safe movement at 20 - 25 mph (32 - 40 kph)

The four-wheel, independent **rubber torsion axles** can be individually replaced for reduced maintenance expense and downtime

Full **360° fifth-wheel** rotation allows the carts to track correctly in any direction for safety and easy maneuverability

## *Options*

- **Bolt-in shelves** and back wall to manage baggage placement
- **Flat** or **v-style floors** to move moisture away and reduce baggage drag
- **Hot-dip galvanizing** provides greater corrosion resistance

*CARTS*
*LOADERS*
*DOLLIES*
*STAIRS*
*RACKS*
*DECKS*

FAST GROUND SUPPORT EQUIPMENT

## SPECIFICATIONS

| | |
|---|---|
| Capacity | Up to 8,000 lbs (3,629 kg) |
| Weight | 1,300 - 1,500 lbs (590-680 kg) |
| Length / Width / Height | 116 in x 60 in x 79.75 in (294.6 cm x 152.4 cm x 202.6 cm) |
| Track Width | 52.75 in (134 cm) |
| Rear Hitch | Spring-loaded E-hitch |
| King Pin | 2 in (5.1 cm) diameter, stress-proof with sealed Timken bearings |
| Hubs | 1.25 in (3.2 cm) diameter sealed, tapered roller bearings |
| Panels | **Body:** 16-gauge, CR sheet<br>**Floor:** 12-gauge, CR sheet, flat or V-style |
| Tires | **Solid sizes:** 4 x 8 in (10.2 x 20.3 cm) / 16 in (40.6 cm) diameter; 5 x 8 in (12.7 x 20.3 cm) / 18 in (45.7 cm) diameter |
| Running Gear | Rigid mount or four-wheel independent rubber torsion axles, with 5 x 2 x 3/16 in (12.7 x 5.1 x 0.48 cm) wall, rectangular tubing |

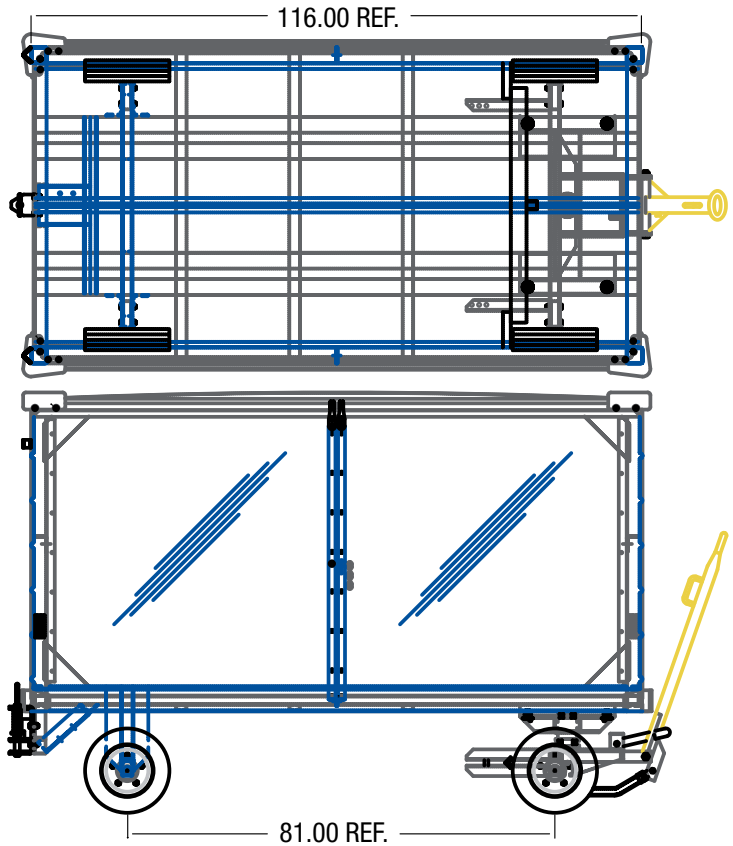


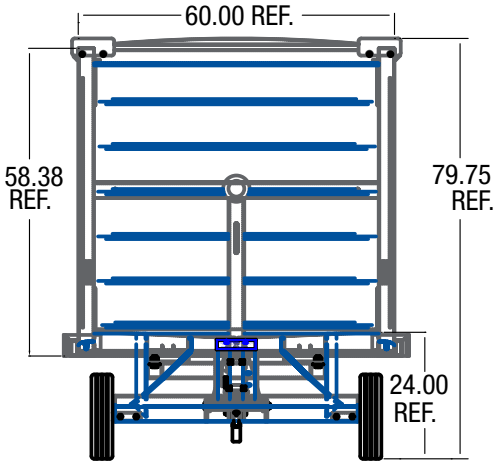


*CARTS*
*LOADERS*
*DOLLIES*
*STAIRS*
*RACKS*
*DECKS*

***A world leader in ground support equipment*** *for 40 years, we design, build and service a broad range of robust, ruggedly-built, dependable equipment for the airline and air cargo industry.*

***To learn more,*** *contact our knowledgeable and experienced Team:*

**info@fastsolutions.com +1 (320) 634-5886 fastsolutions.com**

©2020 FAST Global Solutions